Příklad 3.6

U soustavy nakreslené na obr. 3.6 určete velikost síly S, aby se soustava pohybovala se zrychlením a. Uvažujte pasivní odpory.

Dáno:

$Q_2 = 10^4$ N; $Q_3 = 5.10^3$; $I_{2S} = 1,2 \cdot 10^3$ kg m^2; $l = 1,3$ m; $R = 0,5$ m; $h = 0,2$ m; $e = 0,02$ m; $f = 0,6$; $a = 0,5$ m/s^2; $r_č = 0,08$ m; $f_č = 0,2$

[S = 2487 N]

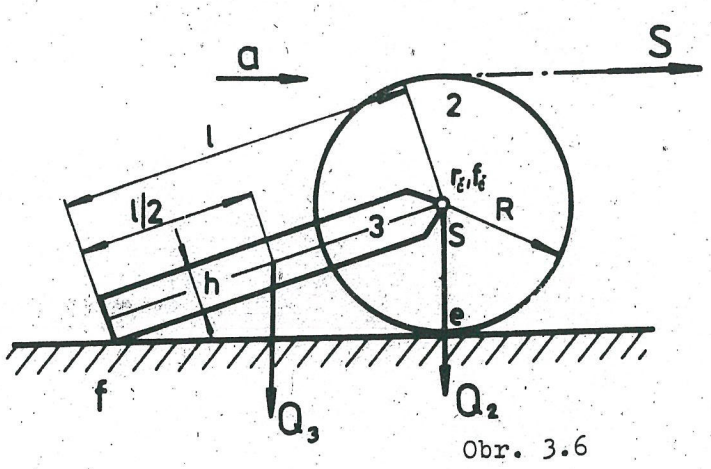

Obr. 3.6

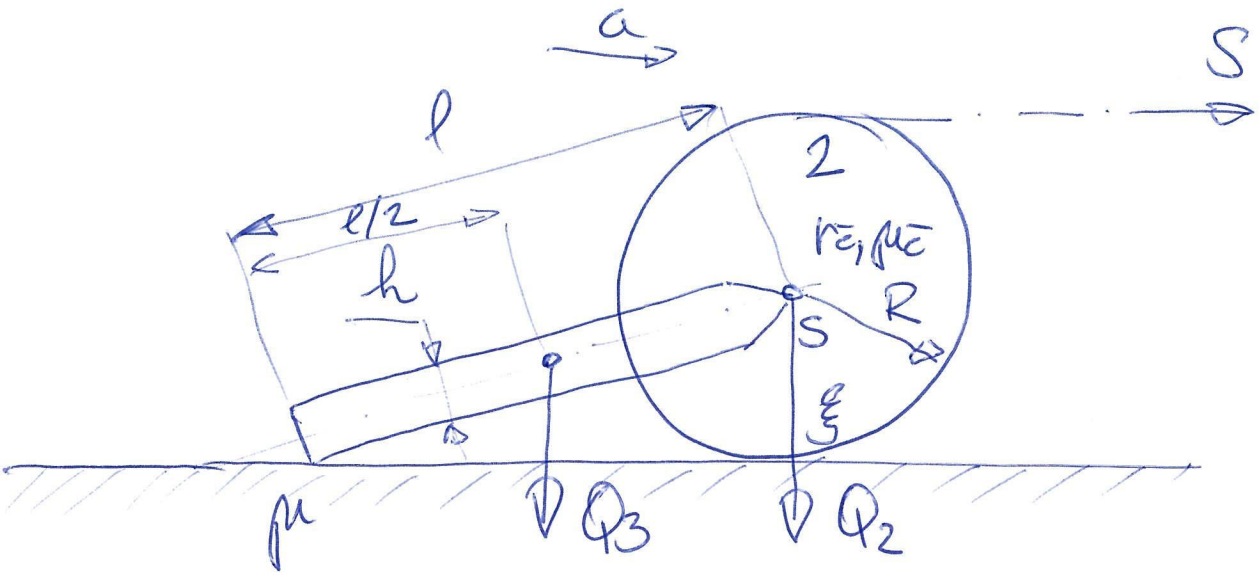

D: $Q_2 = 10^4\,N$ $\quad l = 1{,}3\,m$ $\quad \xi = 0{,}02\,m$

$Q_3 = 5\cdot 10^3\,N$ $\quad R = 0{,}5\,m$ $\quad \mu = 0{,}6$

$I_{S_2} = 1{,}2\cdot 10^3\,kgm^2$ $\quad h = 0{,}2\,m$ $\quad a = 0{,}5\,ms^{-2}$

$r_č = 0{,}08\,m$, $\mu_č = 0{,}2$

U: S pro $a = konst.$

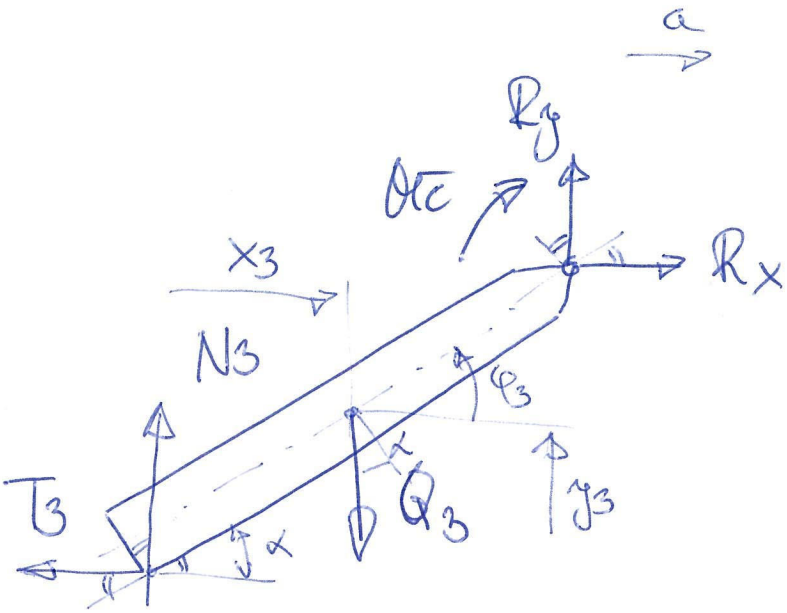

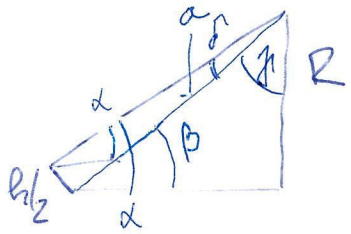

$$\sin\beta = \frac{R}{a} \qquad \cos\gamma = \frac{R}{a}$$

$$a^2 = l^2 + \left(\frac{h}{2}\right)^2 \qquad \pi/2 - \gamma = \beta$$

$$\operatorname{tg}\delta = \frac{h/2}{l}$$

$$\alpha = \frac{\pi}{2} - \gamma - \delta$$

$$m_3 \cdot \ddot{x}_3 = R_x - T_3 \,, \quad T_3 = |N_3| \cdot \mu \qquad \ddot{y}_3 = \emptyset$$

$$\ddot{\varphi}_3 = \emptyset$$

$$m_3 \cdot \ddot{y}_3 = R_y - Q_3 + N_3$$

$$I_{3S3} \cdot \ddot{\varphi}_3 = R_y \cdot \cos\alpha \cdot \frac{l}{2} - N_3 \cos\alpha \cdot \frac{l}{2} + N_3 \sin\alpha \cdot \frac{h}{2} -$$

$$- R_x \cdot \sin\alpha \cdot \frac{l}{2} - T_3 \cos\alpha \cdot \frac{h}{2} - T_3 \sin\alpha \cdot \frac{l}{2} - M_{\bar{c}}$$

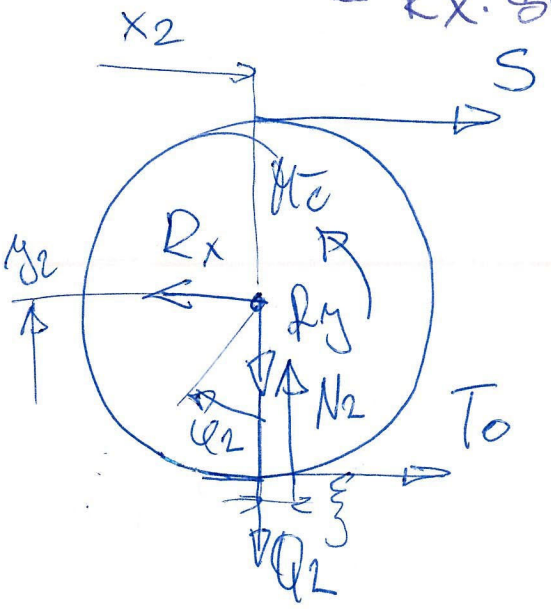

$$m_2 \cdot \ddot{x}_2 = S + T_0 - R_x$$

$$m_2 \cdot \ddot{y}_2 = N_2 - Q_2 - R_y$$

$$I_{2S2} \cdot \ddot{\varphi}_2 = S \cdot R - T_0 \cdot R - M_{\bar{c}} - N_2 \cdot \xi$$

$$M_{\bar{c}} = r_{\bar{c}} \, \mu_{\bar{c}} \cdot \sqrt{R_x^2 + R_y^2}$$

linearizace: $M_{\bar{c}} = r_{\bar{c}} \cdot \mu_{\bar{c}} (0{,}4 R_x + 0{,}96 R_y)$

pro $R_y > R_x$

Poznámky:

$$\ddot{x}_3 = a \qquad \ddot{x}_2 = a$$

$$\ddot{y}_3 = \emptyset \qquad \ddot{y}_2 = \emptyset$$

$$\ddot{\varphi}_3 = \emptyset \qquad \ddot{\varphi}_2 = \frac{a}{R}$$

$$
\begin{array}{c}
\begin{array}{cccccccc}
S & R_x & R_y & N_3 & T_3 & N_2 & T_0 & M_C
\end{array}
\\
\left[\begin{array}{cccccccc}
1 & -1 & & & & & 1 & \\
\hline
 & & -1 & & & 1 & & \\
\hline
R & & & & & -\xi & -R & -1 \\
\hline
 & 1 & & & -1 & & & \\
\hline
 & & 1 & 1 & & & & \\
\hline
 & -\frac{l}{2}\sin\alpha \; -0{,}4\,rz\,pz & \frac{l}{2}\cos\alpha \; -0{,}36\,rz\,pz & \frac{l}{2}\cos\alpha + \frac{l}{2}\sin\alpha & -\frac{l}{2}\cos\alpha - \frac{l}{2}\sin\alpha & & & \\
\hline
 & 0{,}4\,rz\,pz & 0{,}36\,rz\,pz & & & & & -1 \\
\hline
 & & & \mu & -1 & & &
\end{array}\right]
\end{array}
= \underline{A}
\quad
\begin{array}{l}
\\
\\
\\
\\
\\
\\
(rz) \\
(T_3)
\end{array}
$$

$$
\left[\begin{array}{c}
m_2 \cdot \ddot{x}_2 \\
\hline
m_2 \ddot{y}_2 + Q_2 \\
\hline
I_{2S2} \ddot{\varphi}_2 \\
\hline
m_3 \ddot{x}_3 - \\
\hline
m_3 \ddot{y}_3 + Q_3 \\
\hline
I_{3S3} \ddot{\varphi}_3 \\
\hline
\emptyset \\
\hline
\emptyset
\end{array}\right]
= \underline{b}
$$

$$\underline{A}\,\underline{x} = \underline{b}$$

$$\underline{x} = \underline{A}^{-1}\,\underline{b}$$

Přepodmínce

$$(\underline{M}\,\underline{a} = \underline{D}\,\underline{R} + \underline{Q})$$